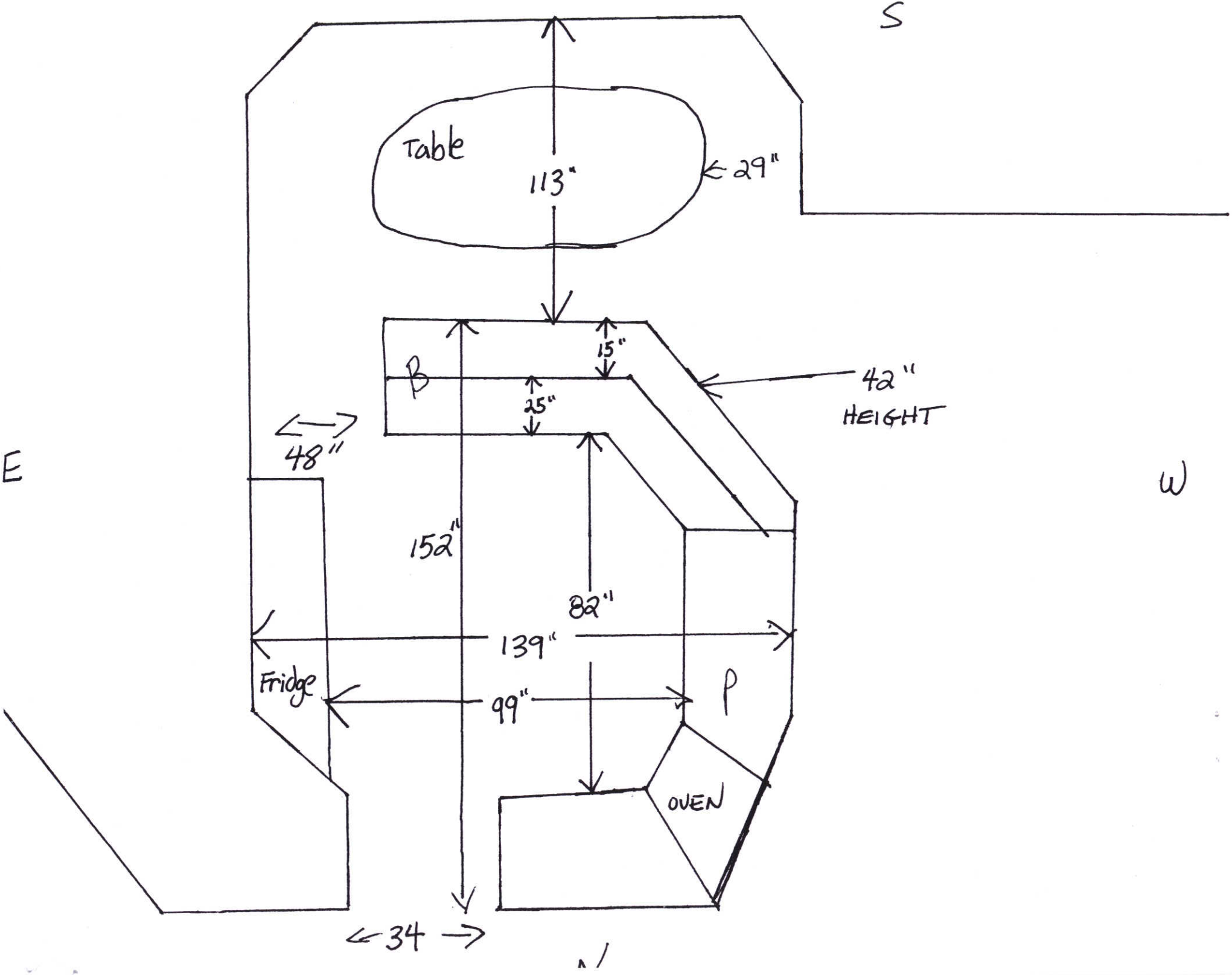
S
Table
113"
29"
15"
B
25"
42"
HEIGHT
48"
E
W
152"
82"
139"
Fridge
99"
P
OVEN
34